PRO-SPEC
Power with Advanced Charge Technology

Yuasa Technical Data Sheet

Yuasa DCB125-6(ET) Pro-Spec Deep Cycle Battery

YUASA

Specifications

Nominal voltage (V)	6
5-hr rate Capacity to 10.5V at 20°C (Ah)	195
20-hr rate Capacity to 10.5V at 20°C (Ah)	240
Capacity @ 75A (mins)	132
Capacity @ 25A (mins)	488

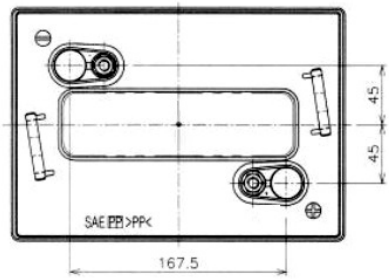

5-Hr Capacity By Temperature

40°C	105%
30°C	100%
0°C	80%

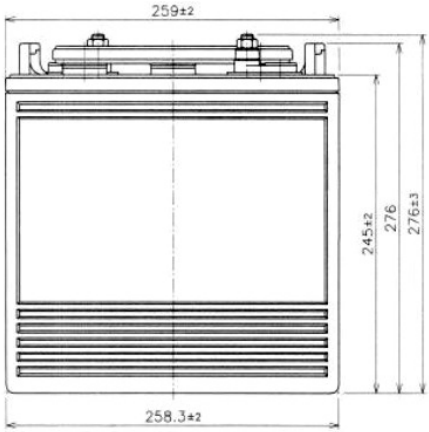

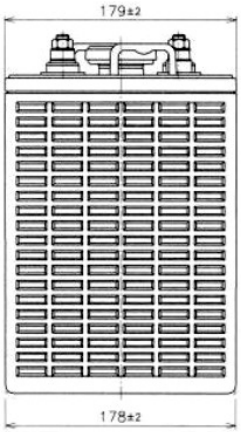

Dimensions

Length (mm)	259
Width (mm)	179
Height (mm)	245
Height over terminals (mm)	276
Mass (kg)	30.7

Material Specifications

Cover Style	: Removable - Maintenance Possible
Cover Vent Style	: Gang style
Container & Cover Material	: Black polypropylene plastic
Case to Cover Seal Method	: Heat sealing
Inner Cell Connector Type	: Through-partition weld
Plate Lug Weld Method	: Automated cast-on process
Positive Grid Material	: Antimony lead alloy
Negative Grid Material	: Antimony lead alloy

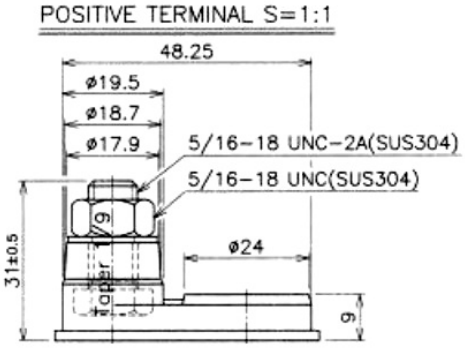

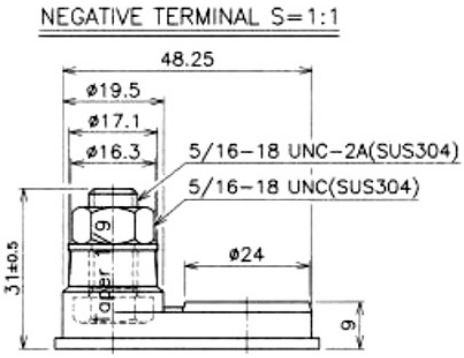

Data Sheet generated on 30/11/2020 – E&OE